SCHOTT
glass made of ideas

KIMAX®

Glass Drainline Installation Guide

Complete System, Reliable, Easy to Install

Easy to install

With few exceptions, KIMAX® glass drainline installs in much the same manner as you would install any drainline system.

KIMAX pipe and fittings possess good mechanical strength, so you don't need to handle the system with kid gloves.

There is no limit to the length or height to which KIMAX glass drainline can be installed. It can be enclosed within a wall, if permitted by code. It can be buried in the ground, underneath concrete, or inside a trough or sleeve.

For above ground installation, drainline pipe is available in 5′ and 10′ lengths in diameters from 1.5″ through 6″. For underground use, 5′ lengths come protected with an expanded polystyrene casing. The system also includes a complete line of glass fittings and traps, plus the accessories and hardware to meet virtually any laboratory drain and vent system requirements.

KIMAX drainline weighs less than conventional drainline materials, so it's easy to handle, fewer hangers and joints are required and sections can be preassembled and carried to the point of installation. Expansion is negligible, therefore expansion joints are not needed or recommended.

Simple, leak-proof joints

Conventional glass-to-glass connections are made quickly and simply using #6650 KIMAX couplings. Just as easily, you can join 1.5″, 2″, 3″, 4″ and 6″ glass (beaded end) drainline to plain end glass, metal or rigid plastic pipe using #6661 KIMAX B/P (Bead to Plain End) couplings. See opposite page for details.

When properly installed both couplings will provide leak-free joints – even with line deflections of up to four degrees.

With B/P couplings and the KIMAX portable glass cutter, you can cut and join 1.5″ through 6″ glass drainline anywhere on the jobsite.

Making Joints with KIMAX® #6650 and #6661 Couplings

Joining KIMAX® drainline pipe and fittings using #6650 KIMAX (bead to bead) drainline coupling.

- Dip coupling in water or wet inside with damp cloth.
- Snap coupling over one end of pipe and then stab other section of pipe into opposite side of the coupling. Start coupling from side opposite bolt as shown in top photo. Push and apply rotational pressure to snap coupling over bead.
- Tighten coupling bolt with 6" ratchet wrench.

Joining KIMAX 1.5" Thru 6" drainline to plain end glass, metal or rigid plastic pipe using #6661 KIMAX B/P (bead to plain end) drainline coupling.

- Wipe beaded end of glass pipe with damp cloth.
- Snap coupling over beaded end of pipe as described for #6650 Drainline Coupling.
- Insert (do not force) plain end of pipe into opposite side of coupling, making certain that the plain end is fully seated in the white Teflon® liner.
- Tighten coupling bolt(s) with 6" ratchet wrench.

With B/P Couplings and the KIMAX Portable Glass Pipe Cutter (see page 9 for instructions), you can cut and join 1.5" thru 6" beaded to plain end glass drainline anywhere on the jobsite.

Bead to Bead

Bead to Plain End

Typical Joint Reference Chart

Type of Joint	Materials Needed	Steps to be Taken
Installing KIMAX® Sink Outlet	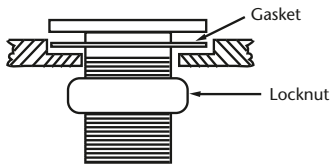 **Size Outlet / Hole / Counterbore** 1½" / 2" / 3½" x 5/16" 2" / 2½" / 4 1/16" x 5/16"	1. Drill hole in sink bottom as indicated for size outlet being installed. 2. Drill counter bore to proper diameter and depth. 3. Smooth bottom of counter bore and insert gasket. 4. Remove locknut and insert outlet through sink hole 5. Screw locknut tight against sink bottom 6. Seal gap between outlet lip and counter bore with acid-resistant 3M-EC-612 caulking compound or equivalent. **Note:** Install stainless steel in same manner as above.
1.5", 2" KIMAX Sink Outlet to KIMAX Beaded Pipe or Trap (same size)	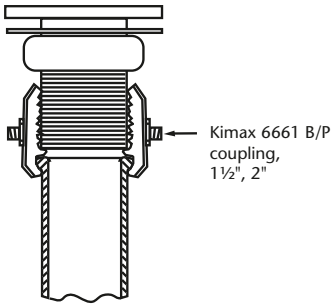	1. Snap coupling over beaded end of pipe or trap. 2. Slide opposite (grooved) side of coupling onto threaded outlet. Do not force but make certain that outlet end is fully seated in coupling. 3. Tighten coupling bolt with 6" ratchet wrench.
1.5" KIMAX (or plastic or metal I.P.S. threaded) Sink Outlets to 1.5" KIMAX Beaded Pipe or Trap	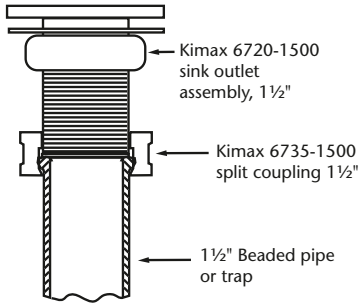	1. Remove clamp from split coupling. 2. Position coupling halves over glass bead. 3. Replace and tighten clamp. 4. Screw coupling onto threaded outlet. **Note:** Use 6739 Gasket when connecting KIMAX beaded pipe or trap to metal threaded sink outlet.
1.5" KIMAX (or plastic or metal I.P.S. threaded) Sink Outlets to 1.5" KIMAX Tailpiece Assembly	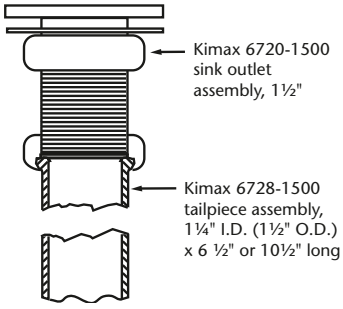	• Slide plastic nut up to top (beaded end) of tailpiece. • Screw nut onto threaded outlet. **Note:** Use 6738 Gasket when connecting glass tailpiece to metal threaded sink outlet.

Type of Joint	Materials Needed	Steps to be Taken
1.5" KIMAX® (or other glass, metal or plastic) Plain End Tailpiece or Plain End Cupsink to 2" KIMAX Trap Inlet Or Adjustable Fitting	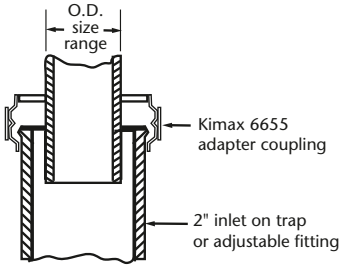 1½" x 1¼" O.D. #6665-1512 1½" x 1½" O.D. #6665-1515 with rubber seal only	1. Snap coupling over beaded end of trap inlet. 2. Slide coupling up over plain and tailpiece or cup sink to desired height. 3. Tighten coupling bolt with 6 inch ratchet wrench. **Note:** Use KIMAX adapter coupling 2" x 1½" to connect to Pyrex sink outlet or plain end cupsink. <table><tr><th>Coupling Size</th><th>Tailpiece Style</th><th>O.D Size Range</th></tr><tr><td>2 x 1½</td><td>KIMAX Glass tail pipe Extension No. 6728, metal tubing, and lead tailpiece extensions.</td><td>1.48 to 1.53</td></tr><tr><td>2 x 1¾</td><td>Lead, Class D or XL tailpiece PYREX tailpiece and cup sink</td><td>1.70 to 1.78</td></tr><tr><td>2 x 1⅞</td><td>Plain end KIMAX Regular Schedule or Heavy Schedule 1½ glass pipe or fittings Durcon # SO-2 Duriron #11713 Lead – Class C or L, B or M Plastic or Steel (1½ IPS)</td><td>1.82 to 1.90</td></tr></table>
KIMAX Beaded Or Plain End Pipe to Metal Bell and Spigot Type	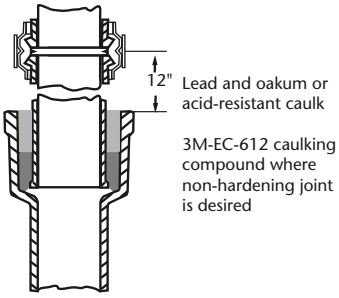	1. For line flexibility, place coupling within 12 inches of caulked joint. 2. If using plain-end glass pipt, smooth external rough edges with fine carborundum stone or 150-grit emery cloth. 3. Insert glass into hub using care so as not to scratch glass. Pack space between glass and hub firmly with non-combustible packing material – then back off glass ½" to ½" from base of hub. 4. If using lead pour in lead* at lowest temperature and caulk lightly with an acid-resistant caulk. **Note:** If lead is used, preheat glass first until water drop sizzles. *Pack with lead wool if joining glass to vitreous tile hub.
Metal or Plastic I.P.S Threaded Pipe (straight or tapered, 1.5", 2" 3", 4" or 6" to KIMAX Beaded Pipe or Trap (same size)	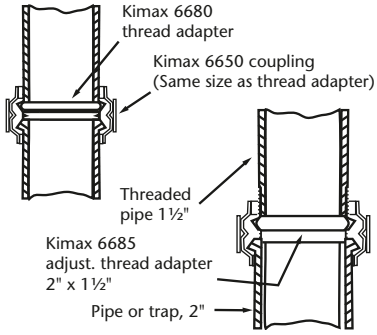	1. Screw thread adapter onto threaded pipe until it "bottoms". With adjustable adapter, screw into threaded pipe until desired height adjustment is reached. 2. Snap coupling over adapter. 3. Stab beaded pipe or trap into opposite side of coupling. 4. Tighten coupling bolt with 6 inch ratchet wrench. **Note:** Use 6685 Adjust. Adapter to join 1½" threaded pipe to 2" KIMAX beaded trap or pipe.
KIMAX (conical end) Process Pipe, 1.5", 2", 3", 4" or 6" to KIMAX Beaded Pipe or Trap (same Size)	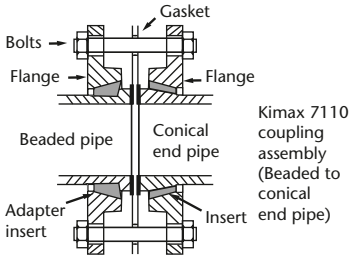	1. Disassemble coupling and remove inserts 2. Slide proper flange over conical end pipe and snap in flange insert. 3. Slide other flange over beaded end pipe and snap in flange adapter insert. 4. Slide both flanges firmly against pipe ends. 5. Insert gasket between pipe ends. 6. Replace bolts and tighten nuts evenly.

Hanging KIMAX® Drainline – Horizontally

- Use padded hangers (to prevent glass to metal contact) to support lines every 8 feet to 10 feet.
- Use extra hanger when three or more couplings fall within 8 foot to 10 foot span.

Note: Appropriate padded hangers are available from Schott North America Inc.

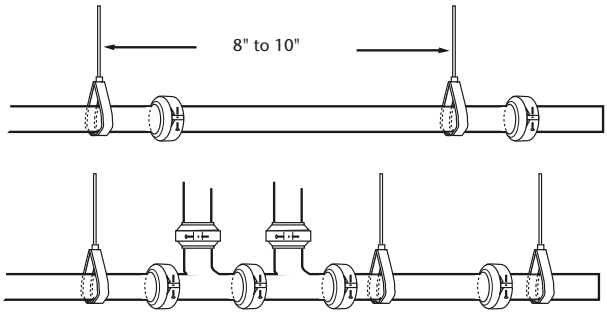

- Do not pull or spring pipe into place. Move hanger to pipe, not pipe to hanger.
- Completely tighten coupling as each joint is made.

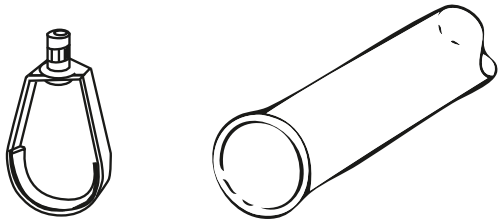

- Keep lines loose. When horizontal lines are hung they should be free to move sideways.

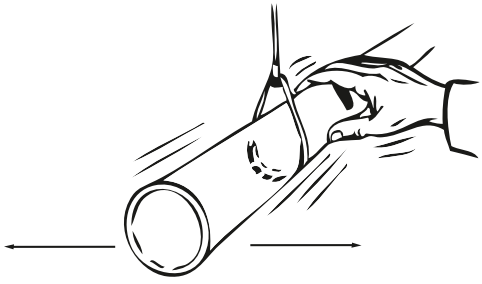

- Pipe passing through walls should be fitted with pipe sleeve at least two inches greater in diameter than pipe O.D.
- Pack space between pipe and sleeve with Fiberglas or glass wool.

Note: KIMAX pipe is U.L. Classified as a fire penetrant, for penetrating fire rated floors. System Numbers for KIMAX pipe are listed in the U.L. Fire Resistance Directory under the file number R11306.

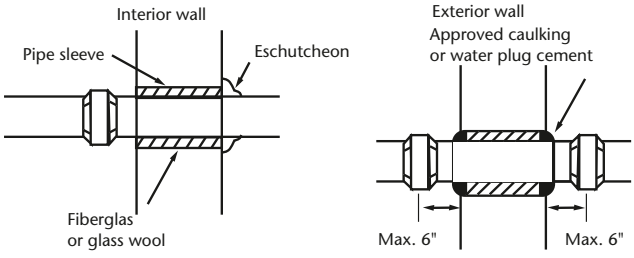

- To pitch a line, snug coupling, cock joint as required to a maximum 4° deflection.

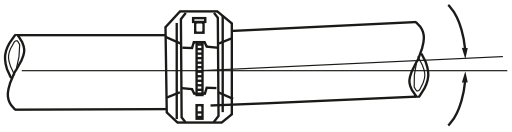

Hanging KIMAX® Drainline – Vertically

- Use coated riser clamps.
- Support 1.5" and 2" stacks at every other floor.
- Support 3", 4" and 6" stacks at every floor.
- Where possible riser clamp should be placed underneath a coupling.

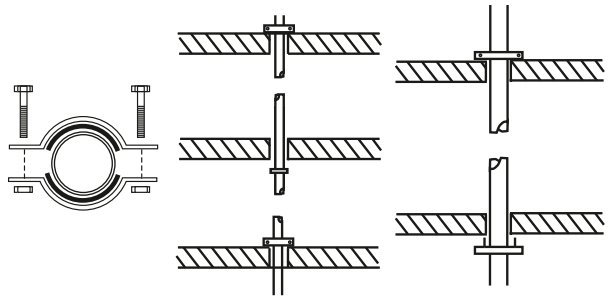

- Place riser clamps either above or below floor.
- Clamp should be below bottom coupling in stack and where possible, below coupling on every third floor.

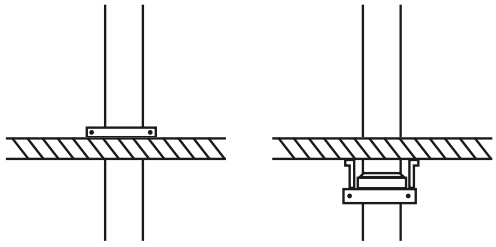

- Do not support vertical stacks with horizontal lines. First hanger should be placed from 6 feet to 8 feet from stack.

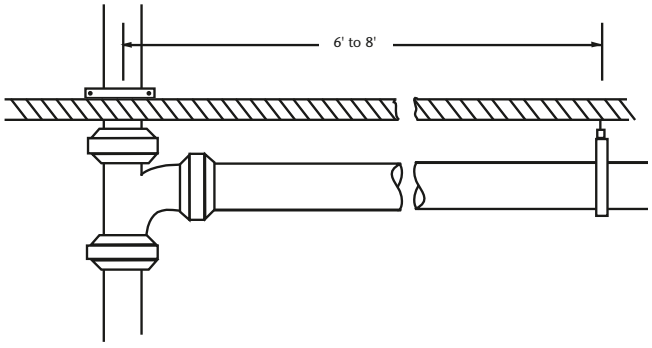

- Pipe passing through floors or slabs should be fitted with pipe sleeve at least two inches greater in diameter than pipe O.D.
- Pack space between pipe and sleeve with Fiberglas or glass wool.
- Install coupling within 6" of floor or slab to give flexibility.

Note: KIMAX pipe is U.L. Classified as a fire penetrant, for penetrating fire rated floors. System Numbers for KIMAX pipe are listed in the U.L. Fire Resistance Directory under the file number R11306.

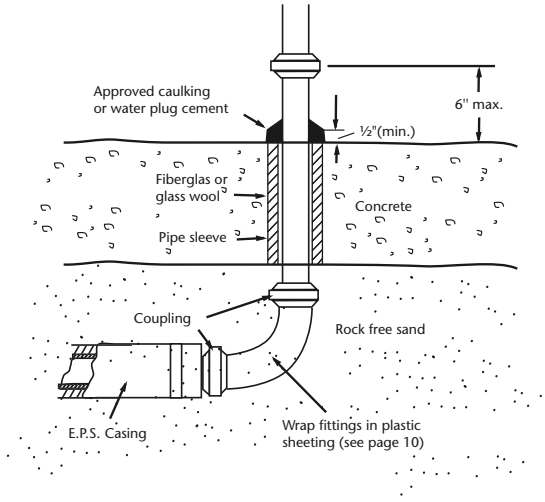

Hanging KIMAX® Drainline – Vertically

Flashing through roof

When flashing through a roof, wrap the vent pipe with tape or an insulating material and follow through using either of the methods indicated below:

Method 1: Seamless lead roof flashing with a caulked counter-flashing sleeve.

Method 2: Seamless lead or copper roof flashing.

Note: The annular opening for the vent should be 2" greater than the pipe O.D. being stubbed through the roof.

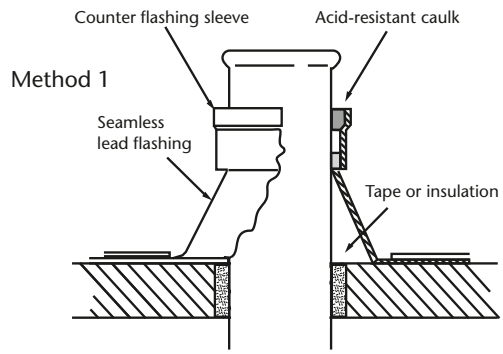

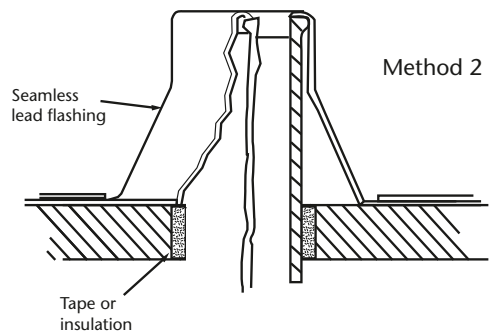

Connecting to floor drain

Method 1: Screw I.P.S. threaded metal nipple into outlet of floor drain and join the glass pipe or fitting to nipple using a KIMAX 6661 B/P Coupling.

Method 2: Cut glass pipe to desired length using KIMAX portable cutting tool. Smooth external sharp edges from cut end and insert into outlet of floor drain. Seal glass in place using non-combustible packing material, and acid-proof cement.

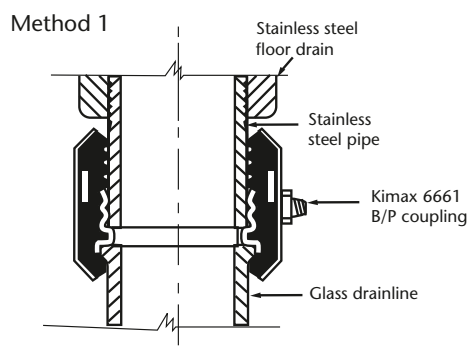

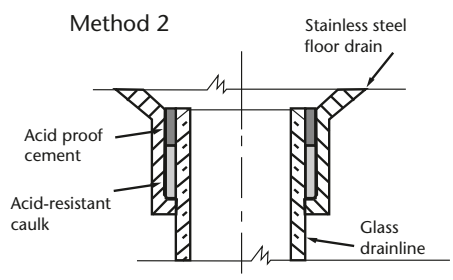

Cutting KIMAX® Drainline Pipe

Tools needed
- Cutting Tool:
  7310-56802, 1.5" and 2", 3"- 4" and 6" Diameter Pipe.
- Safety Glasses
- Grease Pencil
- Measuring Tape
- Propane or Butane Hand Torch
- Emery Cloth or Carborundum Stone
- Work Bench with Backstop

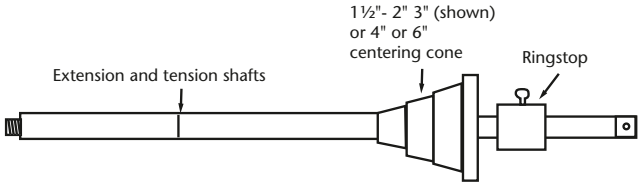

To assemble cutter tools
1. Slide centering cone and ring stop onto extension* and tension shafts.
2. Firmly couple tension shaft and scoring head assembly. Use small cutter head, 7310-S-1000 for 1.5" and 2" pipe and large cutter head 7310-F-5000 for 3"-4" and 6" pipe. A cone for cutting 6" pipe must be ordered separately.

*Use extension shaft if cutting pipe over 2½ feet long.

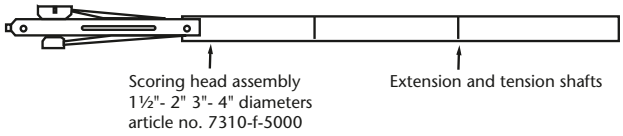

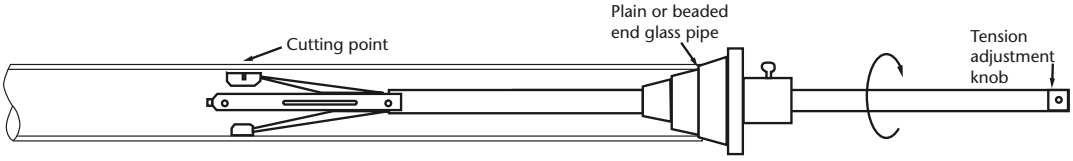

Pipe storage
Protect pipe from scratches. Leave pipe in shipping cartons until immediately prior to installation. Used cartons provide protection to glass pipe on floor prior to cutting or installation.

To cut pipe
Measure and mark – Measure length of pipe required and mark cutting point with grease pencil, making sure surface of glass is dry. **Note:** do not attempt to cut within 8" of a factory beaded pipe end.

Insert cutter – Insert scoring head into pipe with red cutter wheel up and cutter arms completely retracted. Do not scratch inside or outside of pipe as this can cause breakage.

Seat cone/lock ring stop – Slide centering cone into pipe until firmly seated against cut or beaded end. Align cutter wheel with cutting mark. Slide ring stop against centering cone and lock ring stop by tightening thumb screw.
Note: workbench must have backstop for opposite end of pipe.

Tension to score – Turn tension adjustment knob clockwise. Re-check alignment of cutter wheel with pencil mark. Continue turning tension adjustment handle clockwise to give cutter wheel sufficient pressure to score glass. A medium to light score is desirable on all sizes except 6" which requires a heavier score.

Score the pipe – With the pipe against the backstop, centering cone pressed firmly into the pipe, and ring stop locked against centering cone, make a test score (about ½" long) by turning the tension shaft clockwise. Make final adjustment if necessary. Complete the score by turning tension shaft one full turn – making sure to close cutting circle, but not the score beyond the starting point. The tension adjustment handle may require adjustment while scoring to maintain a uniform score as the cutter is turned.

Release tension/remove cutter – Turn tension adjustment knob completely counter-clockwise to draw cutter wheel away from glass. With red cutter head facing up, and cutter arms retracted, withdraw cutter from pipe. Do not drag scoring wheel against the pipe when removing the cutter.

Heat the score – Light crack off torch (propane or butane). Set light blue flame 1" to 1.5" in length. Apply point of flame to score, moving back and forth along score. As pipe begins to separate, follow score mark with flame. You may find it necessary to gently tap one end of the pipe on table top to complete crack off.

Smooth edge – Lightly wipe cut outside sharp edge at approximate 45 degree angle with corborundum stone or 150 grit emery cloth to remove sharp edges.

Cutter/roller assembly maintenance
During normal use the cutter wheel will eventually become dull, this becomes noticeable as the score becomes less sharp and/or increased tension is required to produce a sharp score.

When cutter wheel becomes dull, replace with KIMAX Cutter/Roller Assembly – article number 7310-F-4122. Install per instructions included with the assembly. Also check the roller wheels on the roller assembly They must rotate freely and be free from embedded dirt or grit. If necessary, replace roller assembly – article number 7310-F-6000.

Installing KIMAX® Drainline – Underground

Excavating trench

Excavate trench to workable width (24 inches at bottom) and 1 to 2 inches below final grade if clean dirt – 4 to 6 inches below grade if rocky or clay condition.

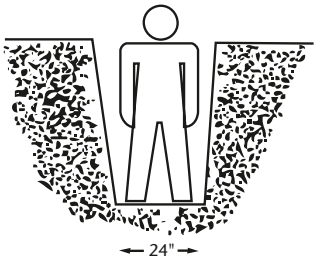

Trench bedding

Trench should have firm bed in order to support pipe uniformly along its full length.

Back-fill to final grade with rock-free sand or soil. Tamp back-fill to assure firm bed and level off mounds or fill depressions with tamped soil.

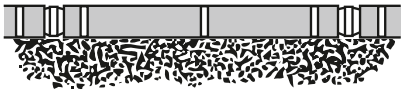

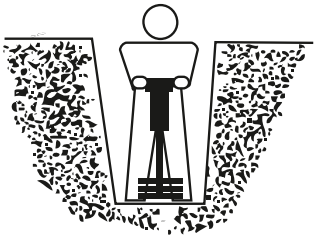

Installing pipe

Use 5-fool lengths of E.P.S. covered heavy schedule drainline pipe and fittings, couple pipe and/or fittings in usual manner.

When convenient, assemble several joints to form a section, tighten couplings firmly and lower section into trench.

Protect fittings by wrapping them in polyvinyl film (5 mil), Scotch Wrap or J.M. Trans-Tex or equal.

Compact sand under fittings for support.

Check all joints and water test.

Note: When odd lengths of pipe are required, remove E.P.S. casing and field fabricate pipe to required length. Cut casing 2 inches shorter than new length and replace on pipe leaving 1 inch of pipe exposed at both ends.

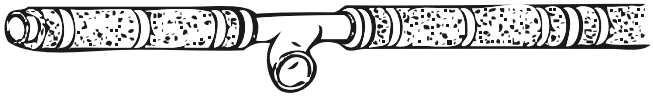

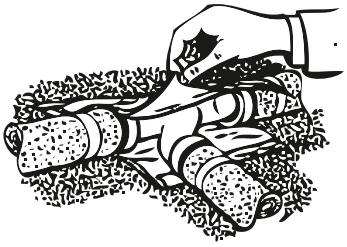

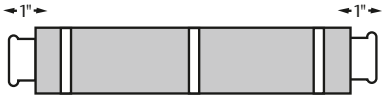

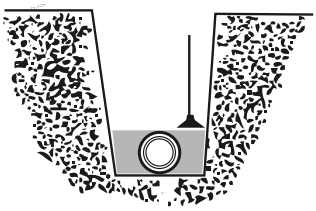

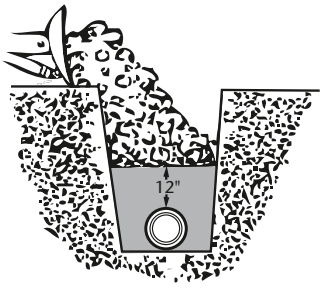

Backfilling trench

Backfill trench with thin layers of rock-free sand or soil to 12 inches above glass pipe.

Tamp sand firmly with hand tamper or spray it with water to make sure it's firm.

Rest of trench can be filled with available soil using mechanical means.

Note: Do not leave pipe in open trenches overnight. In the event of rain, KIMAX EPS covered pipe will float due to its buoyancy.

Testing and protecting glass drainline

Testing

Shake lines to make sure there is no strain. There should be some limited movement in both vertical and horizontal lines.

Test lines in accordance with local codes. Air testing should not exceed 5 psi; water testing should not exceed 22 psi.

In case of leak

Tighten coupling at leaking joint.

If joint continues to leak, remove coupling and make certain that rubber compression liner and TFE seal ring are free from dirt or other obstruction. Also, check that ends of pipe or fittings are properly seated in couplings.

Replace defective couplings and replace pipe or fittings if beaded ends are defective.

Check for good drainline alignment.

Protecting

Protect glass from scratches. Keep pipe and fittings in shipping cartons until ready to use.

Protect glass from weld spatter. Cover with protective material.

When exposed to heavy traffic, protect drainline with expanded metal, plywood enclosure, or channel iron.

Cleaning procedure

To clean drainline system, use cleaning agent to dissolve material causing stoppage. If necessary to mechanically dislodge blockage, remove pipe section if accessible. If not accessible, insert rubber hose or plastic covered snake. Do not insert objects hard enough to scratch glass.

SCHOTT North America, Inc.
2 International Drive, Suite 105
Rye Brook, NY 10573
USA
Phone +1 (914)831-2200
info.tubing@us.schott.com
www.schott.com